BAS-MOBILIAR

Punto

T2063K.



With optional closure

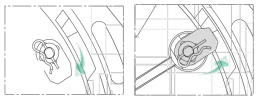

Open - Lock





T2063.

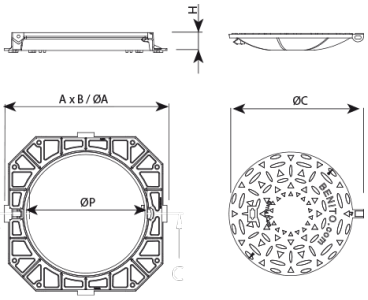

REF.		ØA	B	H	ØC	ØP	UN.
T2063.	SGS	800	-	100	625	600	12
T2063K.	SGS	850	850	100	625	600	12

Punto is designed to support medium traffic. It is perfect for installing on roads with an ADT of 1.000-20.000, particularly road carriageways (including pedestrian streets), stabilised hard shoulders and parking areas for all manner of vehicles.

- Made from spheroidal graphite ductile cast iron, according to ISO 1083 (Type 500-7) and standard EN 1563.
- Compliant with the European standard UNE EN-124.
- Ball and socket joint to guarantee easy opening and safety in operation.
- 90º safety locking and maximum aperture angle of 115º.
- Sound-proof joint included.
- Metal non-slip surface.
- Coated with non-toxic, non-flammable and non-polluting water-soluble black paint.

V. 2025-10-15 | The constant improvement and evolution of our products may result in some modifications of the technical specifications and characteristics of the products without prior notice.

+49 (0) 521 450 131-2 | mb@bas-mobiliar.de