BAS-MOBILIAR

Irrigation Mouth

H40

BR40R

H-40 irrigation outlet for water supply in irrigation networks and water supply systems. Designed for safe and efficient installation, with robust construction and top access via a manhole cover.

TECHNICAL SPECIFICATIONS

DN-40 connection

Dimensions (W × D × H) 305 × 305 × 270.5 mm

Base diameter Ø 210 mm

Top diameter Ø 274 mm

Connection height 149 mm

Connection diameter Ø 90 mm

Other diameters Ø 45 / Ø 110 mm

Materials: Steel and rubber components

High resistance

MANEUVER Component ↓

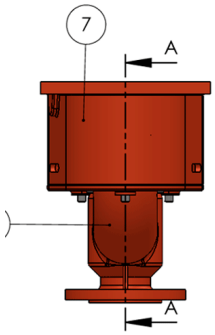

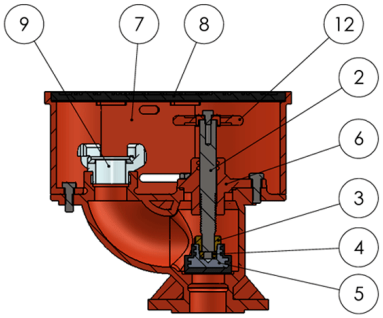

Nº	Referencia	Descripción	Cant.
1	REF.10147	Cuerpo H-40 Llobregat	1
2	REF.10150	Tornillo de maniobra DN-40 Llobregat	1
3	REF.10151	Tuerca de sujeción válvula H40	1
4	REF.10160	Dos medios casquillos válvula H40	1
5	REF.10154	Aro de goma + goma válvula H40	1
6	REF.10148	Cuerpo estopada H-40	1
7	REF.10155	Caja boca de riego H40	1
8	REF.10156	Tapa caja H40	1
9	REF.11086	Racor 45	1
12	REF.10149	Volante DN-40	1

V. 2026-10-07 | The constant improvement and evolution of our products may result in some modifications of the technical specifications and characteristics of the products without prior notice.

+49 (0) 521 450 131-2 | mb@bas-mobiliar.de

Projects:

V. 2026-10-07 | The constant improvement and evolution of our products may result in some modifications of the technical specifications and characteristics of the products without prior notice.